STS6PF30L

P-CHANNEL 30V - 0.027 Ω - 6A SO-8
STripFET™ POWER MOSFET

TYPE	V_{DSS}	$R_{DS(on)}$	I_D
STS6PF30L	30 V	<0.030 Ω	6 A

- TYPICAL R_{DS}(on) = 0.027 Ω
- STANDARD OUTLINE FOR EASY AUTOMATED SURFACE MOUNT ASSEMBLY
- LOW THRESHOLD DRIVE

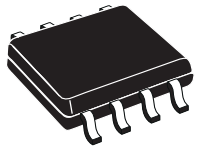

SO-8

DESCRIPTION

This Power MOSFET is the latest development of STMicroelectronis unique "Single Feature Size™" strip-based process. The resulting transistor shows extremely high packing density for low on-resistance, rugged avalanche characteristics and less critical alignment steps therefore a remarkable manufacturing reproducibility.

APPLICATIONS

- MOBILE PHONE APPLICATIONS
- DC-DC CONVERTERS
- BATTERY MANAGEMENT IN NOMADIC EQUIPMENT

INTERNAL SCHEMATIC DIAGRAM

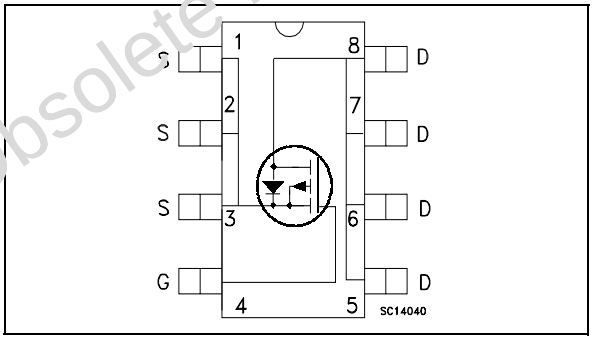

ABSOLUTE MAXIMUM RATINGS

Symbol	Parameter	Value	Unit
V_{DS}	Drain-source Voltage (V_{GS} = 0)	30	V
V_{DGR}	Drain-gate Voltage (R_{GS} = 20 kΩ)	30	V
V_{GS}	Gate- source Voltage	± 16	V
I_D	Drain Current (continuous) at T_C = 25°C	6	A
I_D	Drain Current (continuous) at T_C = 100°C	3.8	A
I_{DM}(•)	Drain Current (pulsed)	24	A
P_{tot}	Total Dissipation at T_C = 25°C	2.5	W

(•) Pulse width limited by safe operating area.

Note: For the P-CHANNEL MOSFET actual polarity of voltages and current has to be reversed

Information furnished is believed to be accurate and reliable. However, STMicroel
of use of such information nor for any infringement of patents or other rights of third
by implication or otherwise under any patent or patent rights of STMicroelectronic
to change without notice. This publication supersedes and replaces all informatior
authorized for use as critical components in life support devices or systems withou

The ST logo is registered trademark of S
® 2003 STMicroelectronics - All Righ

All other names are the property of their r

STMicroelectronics GROUP OF C
Australia - Brazil - China - Finland - France - Germany - Hong Kong - In
Singapore - Spain - Sweden - Switzerland - Ur

http://www.st.com

Obsolete Product(s) - Obsolete Product(s)

THERMAL DATA

Rthj-amb	Thermal Resistance Junction-ambient	Max	50	°C/W
T_j	Maximum Lead Temperature For Soldering Purpose	Typ	150	°C
T_{stg}	storage temperature		-55 to 150	°C

ELECTRICAL CHARACTERISTICS (T_{case} = 25 °C unless otherwise specified)

OFF

Symbol	Parameter	Test Conditions	Min.	Typ.	Max.	Unit
$V_{(BR)DSS}$	Drain-source Breakdown Voltage	I_D = 250 µA, V_{GS} = 0	30			V
I_{DSS}	Zero Gate Voltage Drain Current (V_{GS} = 0)	V_{DS} = Max Rating V_{DS} = Max Rating T_C = 125°C			1 10	µA µA
I_{GSS}	Gate-body Leakage Current (V_{DS} = 0)	V_{GS} = ± 16 V			±100	nA

ON (*)

Symbol	Parameter	Test Conditions	Min.	Typ.	Max.	Unit
$V_{GS(th)}$	Gate Threshold Voltage	V_{DS} = V_{GS} I_D = 250 µA	1	1.6	2.5	V
$R_{DS(on)}$	Static Drain-source On Resistance	V_{GS} = 10 V I_D = 3 A V_{GS} = 5 V I_D = 3 A		0.027 0.034	0.030 0.042	Ω Ω

DYNAMIC

Symbol	Parameter	Test Conditions	Min.	Typ.	Max.	Unit
g_{fs} (*)	Forward Transconductance	V_{DS}=10 V I_D=3 A		12		S
C_{iss} C_{oss} C_{rss}	Input Capacitance Output Capacitance Reverse Transfer Capacitance	V_{DS} = 25V, f = 1 MHz, V_{GS} = 0		1670 345 120		pF pF pF

Obsolete Product(s) - Obsolete Product(s)

ELECTRICAL CHARACTERISTICS (continued)

SWITCHING ON(*)

Symbol	Parameter	Test Conditions	Min.	Typ.	Max.	Unit
$t_{d(on)}$ t_r	Turn-on Delay Time Rise Time	V_{DD} = 15 V I_D = 3 A R_G = 4.7 Ω V_{GS} = 5 V (Resistive Load, Figure 1)		62 140		ns ns
Q_g Q_{gs} Q_{gd}	Total Gate Charge Gate-Source Charge Gate-Drain Charge	V_{DD}= 24V I_D= 6A V_{GS}=5V (see test circuit, Figure 2)		21 3.9 8.6	28	nC nC nC

SWITCHING OFF(*)

Symbol	Parameter	Test Conditions	Min.	Typ.	Max.	Unit
$t_{d(off)}$ t_f	Turn-off Delay Time Fall Time	V_{DD} = 24 V I_D = 3 A R_G = 4.7Ω, V_{GS} = 5 V (Resistive Load, Figure 1)		57 19		ns ns

SOURCE DRAIN DIODE(*)

Symbol	Parameter	Test Conditions	Min.	Typ.	Max.	Unit
I_{SD} I_{SDM} (•)	Source-drain Current Source-drain Current (pulsed)				6 4	A A
V_{SD} (*)	Forward On Voltage	I_{SD} = 6 A V_{GS} = 0			1.2	V
t_{rr} Q_{rr} I_{RRM}	Reverse Recovery Time Reverse Recovery Charge Reverse Recovery Current	I_{SD} = 6 A di/dt = 100A/µs V_{DD} = 15 V T_j = 150°C (see test circuit, Figure 3)		37 46.3 2.5		ns nC A

(*)Pulse width ≤ 300 µs, duty cycle 1.5 %.
(•)Pulse width limited by T_{JMAX}

Obsolete Product(s) - Obsolete Product(s)

Safe Operating Area

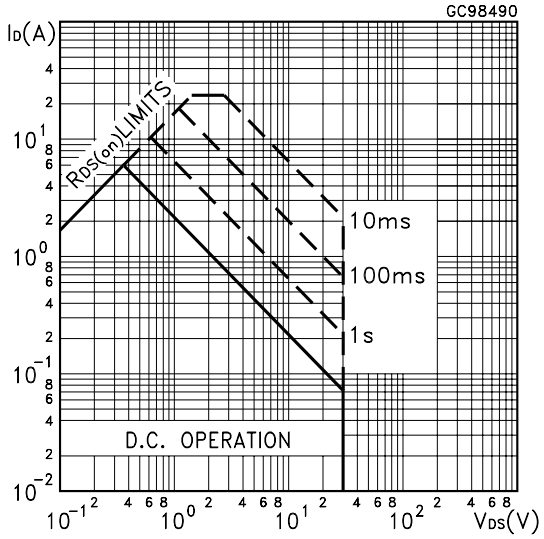

Thermal Impedance

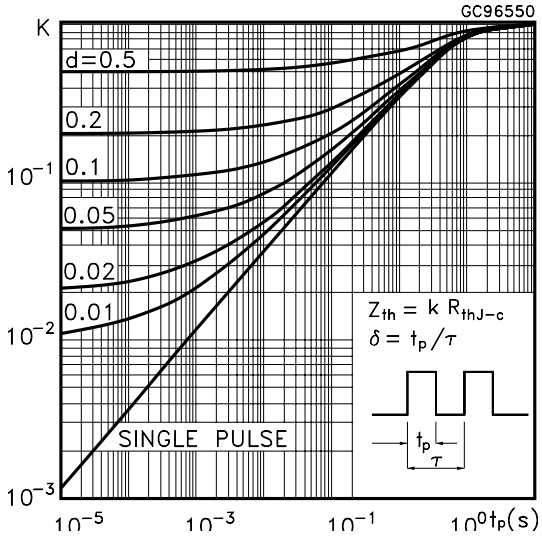

Output Characteristics

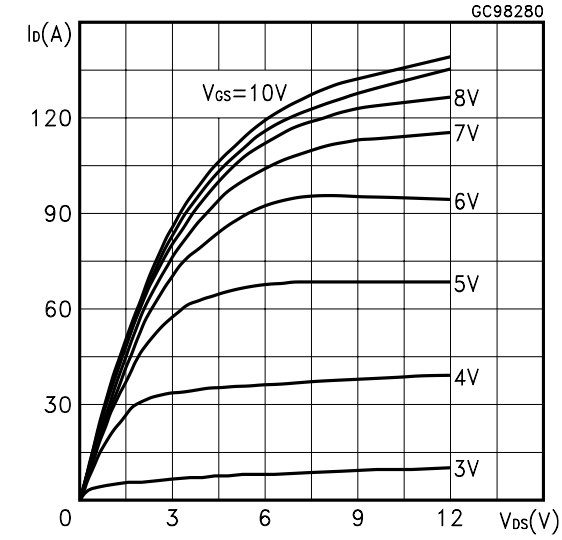

Transfer Characteristics

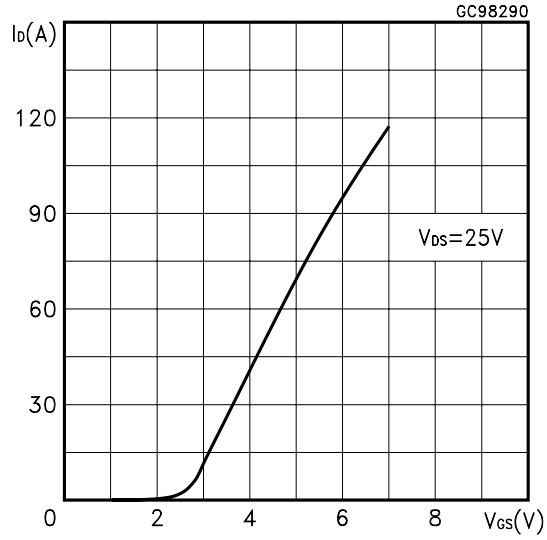

Transconductance

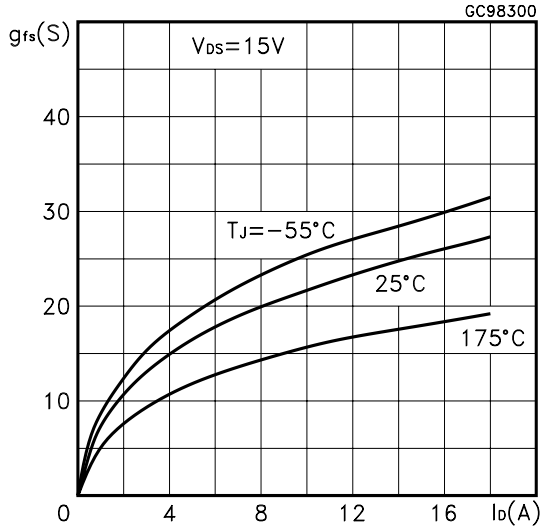

Static Drain-source On Resistance

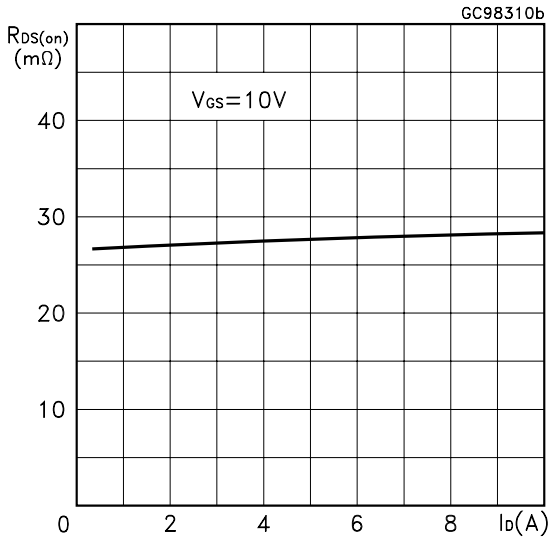

Gate Charge vs Gate-source Voltage

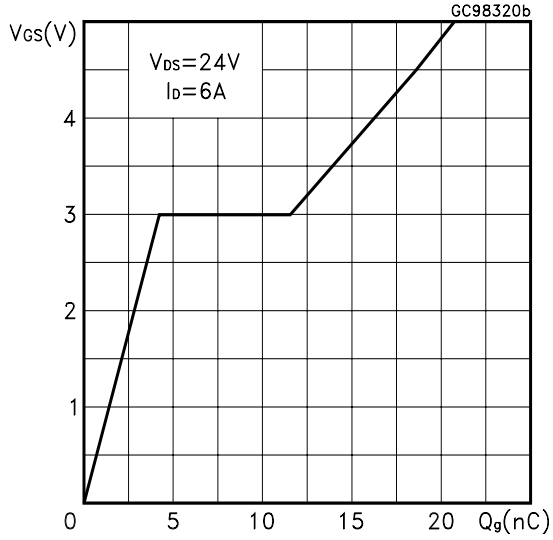

Capacitance Variations

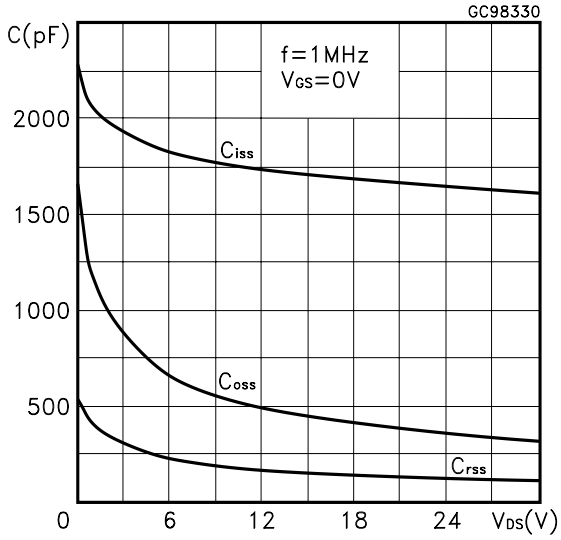

Normalized Gate Threshold Voltage vs Temperature

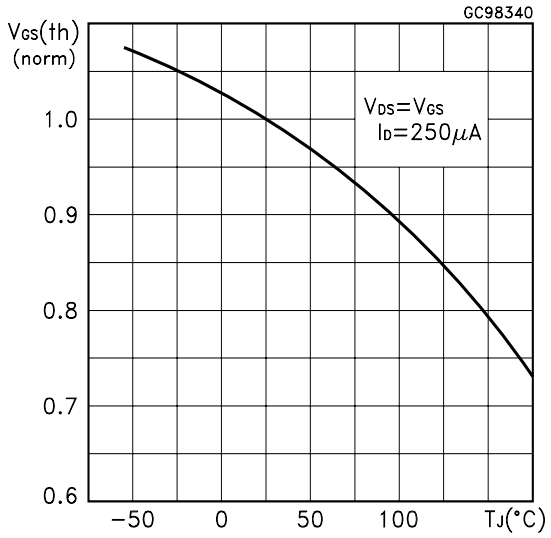

Normalized on Resistance vs Temperature

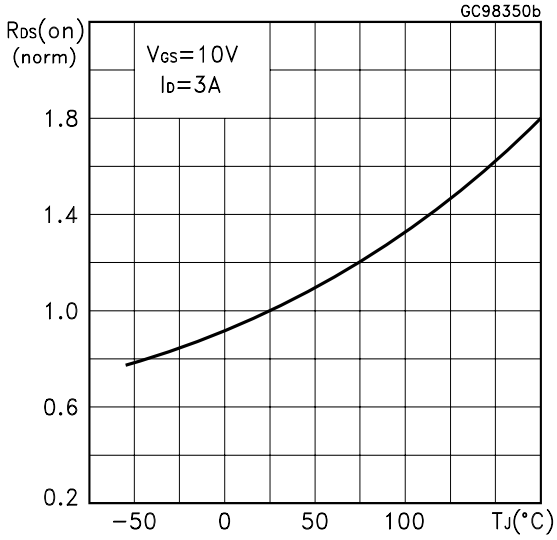

Source-drain Diode Forward Characteristics

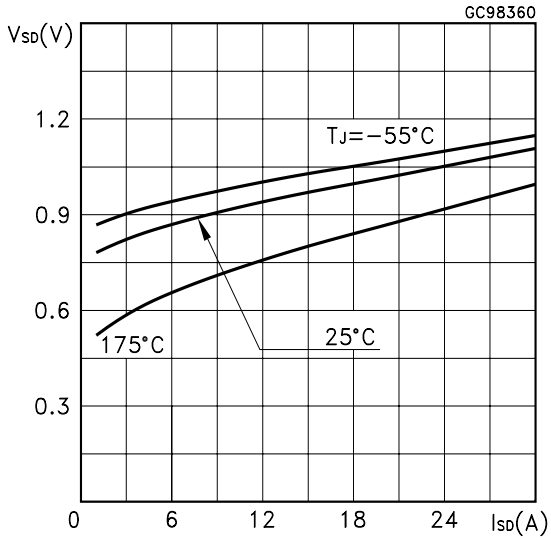

Normalized Breakdown Voltage vs Temperature

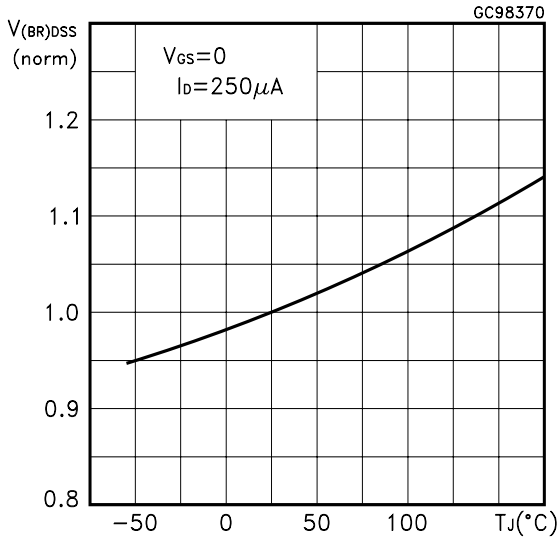

Fig. 1: Switching Times Test Circuits For Resistive Load

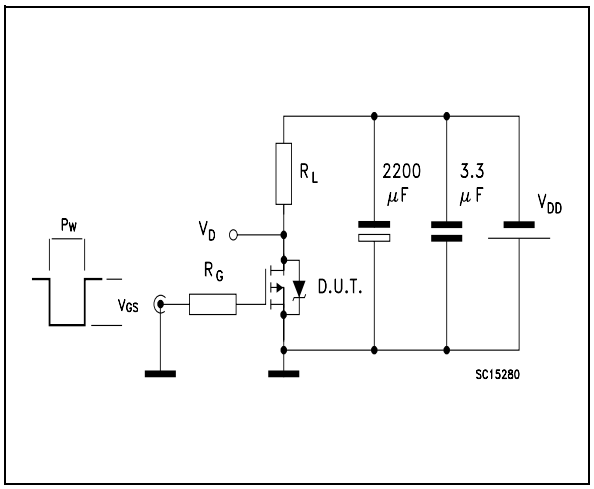

Fig. 2: Gate Charge test Circuit

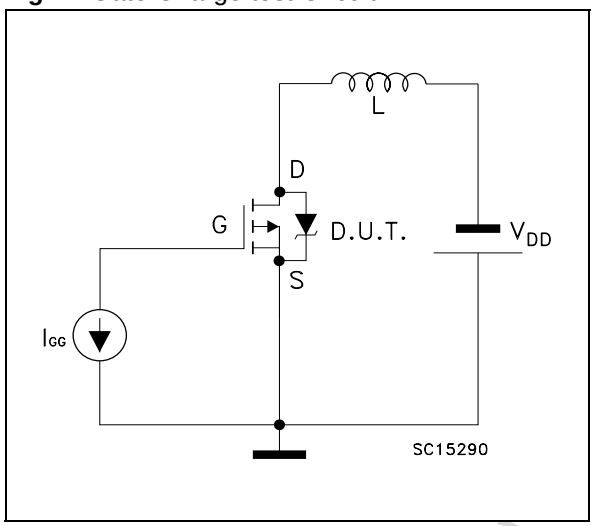

Fig. 3: Test Circuit For Diode Recovery Behaviour

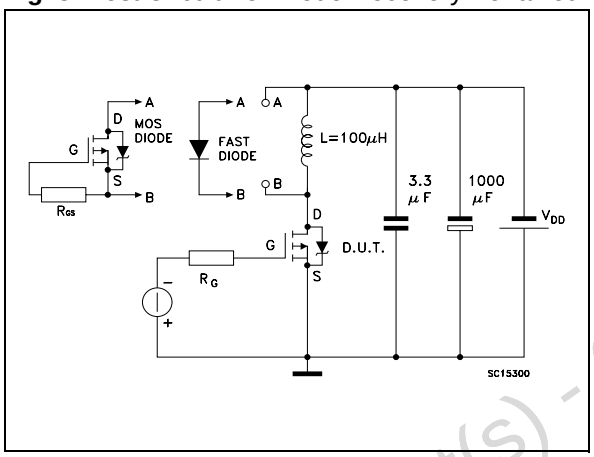

Obsolete Product(s) - Obsolete Product(s)

SO-8 MECHANICAL DATA

DIM.	mm			inch		
	MIN.	TYP.	MAX.	MIN.	TYP.	MAX.
A			1.75			0.068
a1	0.1		0.25	0.003		0.009
a2			1.65			0.064
a3	0.65		0.85	0.025		0.033
b	0.35		0.48	0.013		0.018
b1	0.19		0.25	0.007		0.010
C	0.25		0.5	0.010		0.019
c1	45 (typ.)					
D	4.8		5.0	0.188		0.196
E	5.8		6.2	0.228		0.244
e		1.27			0.050	
e3		3.81			0.150	
F	3.8		4.0	0.14		0.157
L	0.4		1.27	0.015		0.050
M			0.6			0.023
S	8 (max.)					

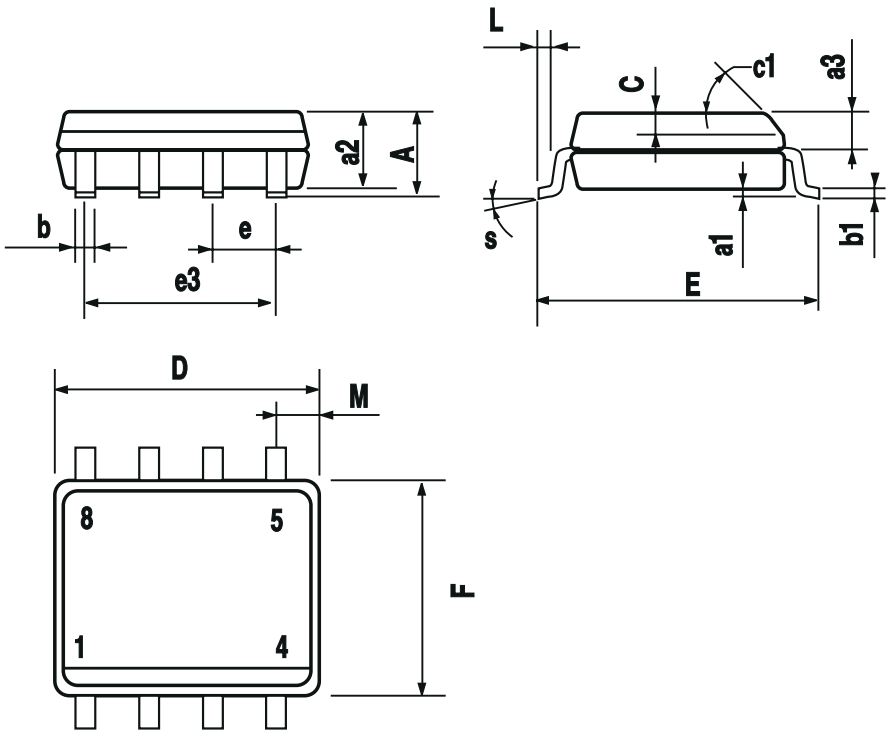

0016023

Obsolete Product(s) - Obsolete Product(s)

Information furnished is believed to be accurate and reliable. However, STMicroelectronics assumes no responsibility for the consequences of use of such information nor for any infringement of patents or other rights of third parties which may result from its use. No license is granted by implication or otherwise under any patent or patent rights of STMicroelectronics. Specifications mentioned in this publication are subject to change without notice. This publication supersedes and replaces all information previously supplied. STMicroelectronics products are not authorized for use as critical components in life support devices or systems without express written approval of STMicroelectronics.

The ST logo is registered trademark of STMicroelectronics
® 2003 STMicroelectronics - All Rights Reserved

All other names are the property of their respective owners.

STMicroelectronics GROUP OF COMPANIES
Australia - Brazil - Canada - China - Finland - France - Germany - Hong Kong - India - Israel - Italy - Japan - Malaysia - Malta - Morocco - Singapore - Spain - Sweden - Switzerland - United Kingdom - United States.

http://www.st.com